THE INFORMATION AND DESIGN DISCLOSED HEREIN WAS ORIGINATED BY AND IS THE PROPERTY OF SENSOR SYSTEMS, INC. SENSOR RESERVES ALL PATENT, PROPRIETARY, DESIGN, MANUFACTURING, REPRODUCTION USE AND SALES RIGHTS THERETO AND TO ANY ARTICLE DISCLOSED THEREIN, EXCEPT TO THE EXTENT RIGHTS ARE EXPRESSLY GRANTED TO OTHERS. THE FOREGOING DOES NOT APPLY TO VENDOR PROPRIETARY PARTS.

REVISION HISTORY

REV	DESCRIPTION	ECO	DATE	APPROVED
B	REDRAWN WITH NO CHANGES	ECO 978	5-06-83	SR
C	TEMP WAS +250°F	ECO 2408	10-18-92	TB
D	ADDED "REF" TO DIMS; DIM 2.58 WAS 2.50; ADDED .22 RAD TYP REF	ECO 4484	2-01-02	FN
E	ADDED OPTIONAL COLORS AVAILABLE	ECO 6477	8-28-09	KER DJ
F	ADDED CG LOCATION & DIMS	ECO 8126	6-29-12	KER DJ
G	ADDED NOTE 1	ECO 8696	11-15-13	KER DJ
H	INCORP MATL, MATING CONNECTOR & MTG DETAIL	ECO 8874	10-15-14	KER DJ

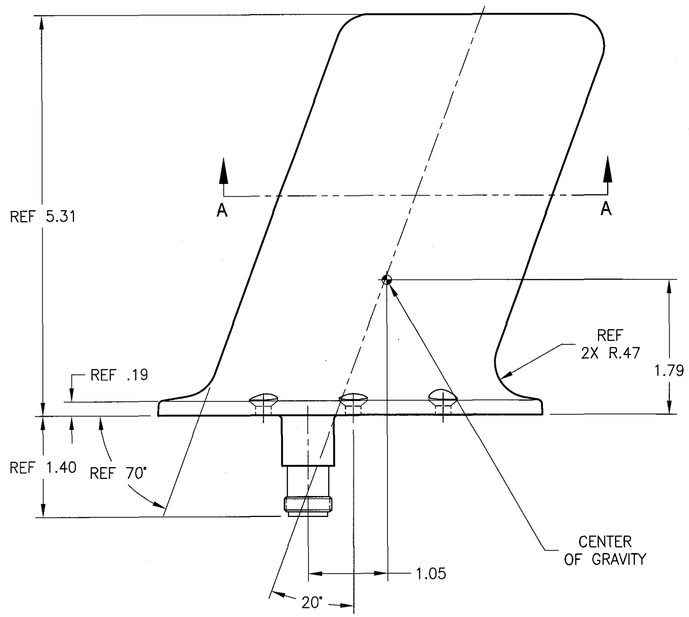

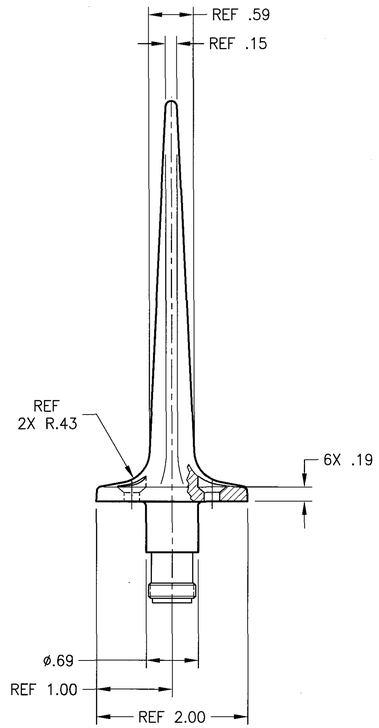

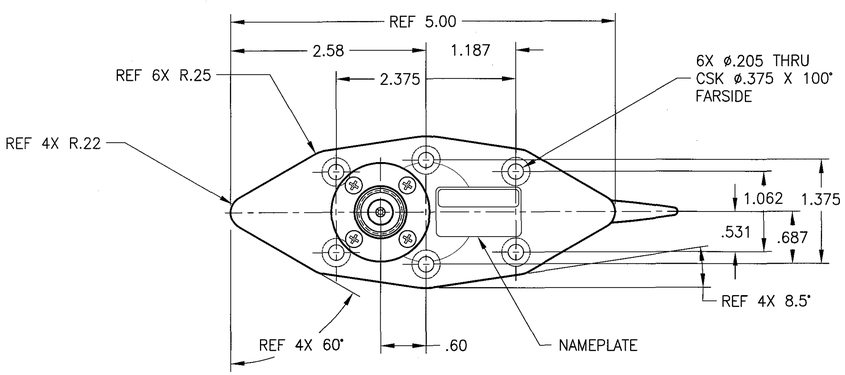

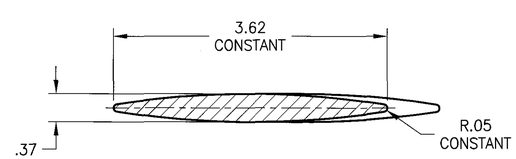

SECTION A-A

SPECIFICATIONS

ELECTRICAL

FREQUENCY		390–450 MHz
VSWR	390–450 MHz	≤ 2.0:1
	402–420 MHz	≤ 1.7:1
RADIATION PATTERNS		1/4 WAVE MONOPOLE
POLARIZATION		VERTICAL
IMPEDANCE		50 OHMS
POWER		100 WATTS AVERAGE
LIGHTNING PROTECTION		D.C. GROUNDED PER MIL–B–5087

MECHANICAL

WEIGHT	11 OZ
CONNECTOR	TYPE "N" FEMALE, MATES WITH M39012/01
MATERIAL	CASTING: A–380 AL ALY; CENTER DIELECTRIC: DIALLYL PHALATE PER MIL–M–19833 TYPE GO–1–30
FINISH	SKYDROL RESISTANT POLYURETHANE ENAMEL COLOR: GLOSS WHITE #17925 PER FED–STD–595 (OPTIONAL COLORS AVAILABLE)
MOUNTING SURFACE	IRIDITE PER MIL–DTL–5541

ENVIRONMENTAL

TEMPERATURE	–54°C(–65°F) TO +85°C(+185°F)
ALTITUDE	70,000 FT

FEDERAL AND MILITARY

DESIGNED TO:	MIL–HDBK–5400 MIL–A–27164 MIL–STD–810B AT–896/A

1. S65–1217 IS THE SAME AS S65–1217 WH.

NOTES: UNLESS OTHERWISE SPECIFIED

–2	–1	CAGE CODE	PART OR IDENTIFYING NO.	NOMENCLATURE OR DESCRIPTION	MATERIAL SPECIFICATION	FIND NO.
QTY REQD						

PARTS LIST

PART DASH NO.	NEXT ASSY	USED ON	NEXT	FINAL
	APPLICATION			

UNLESS OTHERWISE SPECIFIED
DIMENSIONS ARE IN INCHES.
TOLERANCES ARE:
DECIMALS .XX±.03 .XXX±.010
ANGLES ±1°

SURFACE TEXTURE PER ASME B46.1

DRAWN	R. DOWN	1–23–75
CHECKED	H. CRANE	1–23–75
DESIGN		10-09-14
PROJ ENGR	P CRANE	1–23–75
MECH ENGR		
Q.C.		10/9/14
ENGR OFC		10/13/14
APPVL		10-13-14
APPVL		10-16-14

Sensor Systems® inc. Chatsworth, California 91311

TITLE
OUTLINE DRAWING
UHF BLADE ANTENNA

SIZE	CAGE CODE	DWG NO.	REV.
D	13691	S65-1217	H

SCALE 1/1 | 01217H KER 02OCT14 | SHEET 1 OF 1