REVISION HISTORY			
REV	DESCRIPTION	ECO	DATE
01	PROTOTYPE REVISION	–	10-9-25
02	UPDATE FEDERAL & MILITARY SPECS	–	10-21-25

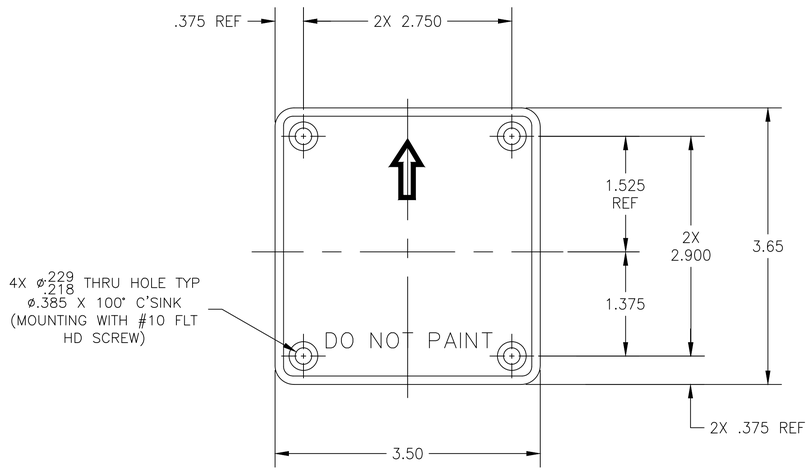

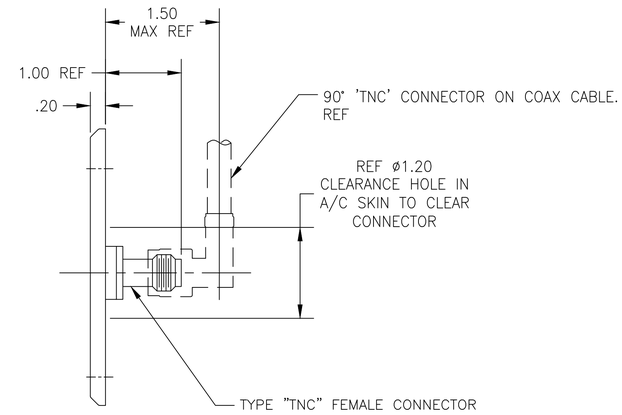

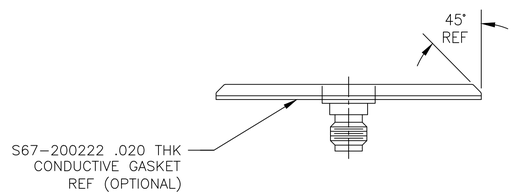

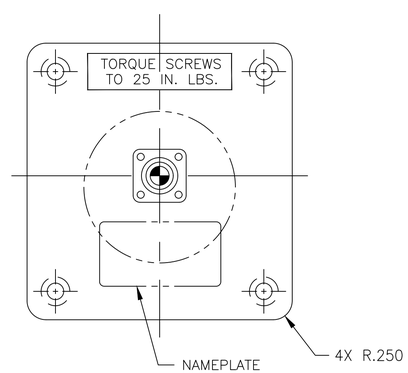

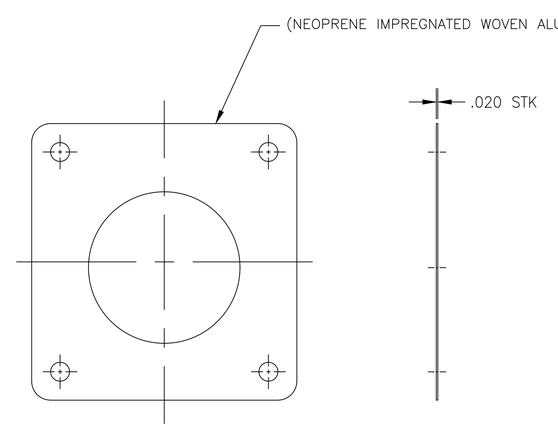

CONDUCTIVE GASKET
(OPTIONAL)

SPECIFICATIONS

ELECTRICAL	
FREQUENCY	4200 TO 4400 MHz
VSWR	≤ 1.8:1 (4250–4350 MHz)
	≤ 2.0:1 (4200–4400 MHz)
IMPEDANCE	50 OHMS
POLARIZATION	LINEAR
POWER HANDLING	10 WATT (AVG)
	100 WATT (PEAK)
IN-BAND GAIN (4200–4400 MHz)	> 8.5 dBi @ZENITH
	< 11.5 dBi @ZENITH
OUT-OF-BAND GAIN	11.5 dBi MAX (3000–5600 MHz)
AVERAGE GROUP DELAY	1.1 ns
AVERAGE GROUP DELAY UNCERTAINTY	< 0.2 ns
	< 1 ns PEAK-TO-PEAK (2–50 MHz)
GROUP DELAY RIPPLE	< (3–100/Tgd) ns PEAK-TO-PEAK (50–100 MHz)
	< 2 ns PEAK-TO-PEAK (100–200 MHz)
LIGHTNING PROTECTION	D.C. GROUNDED
MECHANICAL	
WEIGHT	4.0 OZ
FINISH	SKYDROL RESISTANT POLYURETHANE
	ENAMEL COLOR GLOSS WHITE
	BASE IRIDITE PER AMS-C-5541
CONNECTOR	TYPE "TNC" FEMALE
MATERIAL	ALUM 6061-T6; TEFLON/GLASS
ENVIRONMENTAL	
TEMPERATURE	-54°C TO + 55°C (OPERATING)
	-65°C TO +85°C (NON-OPERATING)
ALTITUDE	-100' TO 60,000 FT.
VIBRATION	10 G's
FEDERAL AND MILITARY	
DESIGNED TO:	MEET NEW RTCA MOPS TSO REQUIREMENTS
	ARINC 707 COMPATIBLE
ISOLATION	
	14" LATERAL SEPARATION
	20" LONGITUDINAL SEPARATION 50 dB
	88 dB

QTY	CAGE CODE	PART OR IDENTIFYING NO.	NOMENCLATURE OR DESCRIPTION	MATERIAL SPECIFICATION	FIND NO.
1		S67-200222	CONDUCTIVE GASKET	.020 THK	2
4		MS24693C272	MOUNTING SCREWS	STAINLESS STEEL	1

PARTS LIST

UNLESS OTHERWISE SPECIFIED
DIMENSIONS ARE IN INCHES.
TOLERANCES ARE:
DECIMALS .XX±.03 .XXX±.010
ANGLES ±1°
SURFACE TEXTURE PER ASME B46.1

DRAWN	A. GERSCOVICH	10-9-25
CHECKED		
PROJ ENGR		
ENGR MGR		
ENGR DIR		

PROPRIETARY AND CONFIDENTIAL THE INFORMATION AND DESIGN DISCLOSED HEREIN WAS ORIGINATED BY AND IS THE PROPERTY OF SENSOR SYSTEMS, INC. SENSOR RESERVES ALL PATENT, PROPRIETARY, DESIGN, MANUFACTURING, REPRODUCTION USE AND SALES RIGHTS THERETO AND TO ANY ARTICLE DISCLOSED THEREIN, EXCEPT TO THE EXTENT RIGHTS ARE EXPRESSLY GRANTED TO OTHERS. THE FOREGOING DOES NOT APPLY TO VENDOR PROPRIETARY PARTS.
EXPORT REGULATION THIS DOCUMENT INCLUDES TECHNOLOGY SUBJECT TO THE EXPORT ADMINISTRATION REGULATIONS (15 CFR 730-774). US GOVERNMENT AUTHORIZATION IS REQUIRED TO RELEASE OR TRANSFER THIS TECHNOLOGY TO FOREIGN PERSONS.

Sensor Systems
A DELEX COMPANY

TITLE
OUTLINE DRAWING
5G COMPATIBLE RADAR ALTIMETER

SIZE	CAGE CODE	DWG NO.	REV.
D	13691	S67-2002-34-1	02

SCALE 1:1 SHEET 1 OF 1

NOTES: UNLESS OTHERWISE SPECIFIED